Date: 290914	Sign. KDA/lje	Scale: 1:40	No. T11686

UPLIFTING COMPANY

AUTOP STENHOJ
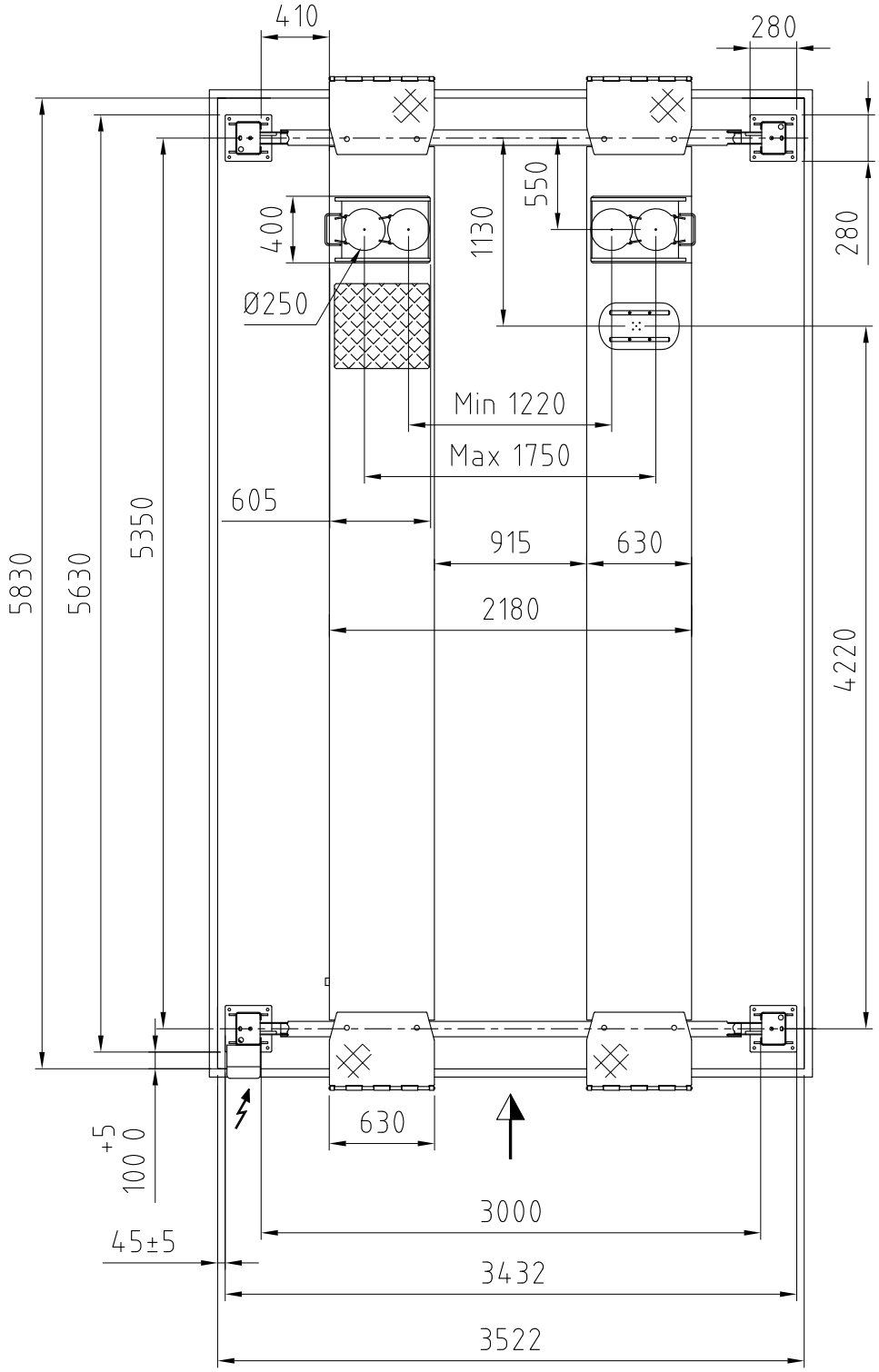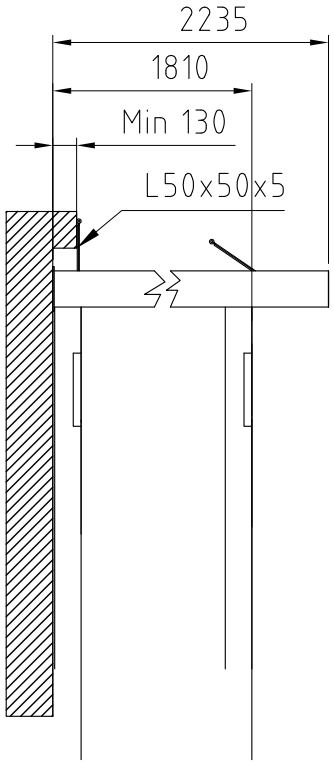
Major ATL 4830-54
4800 kg.
Class 7 (recessed)
Rev. date: 110615